CONTENTS

– Gear Couplings

– Parts and their names

– Dimensions

– Installation

– Alignment Information

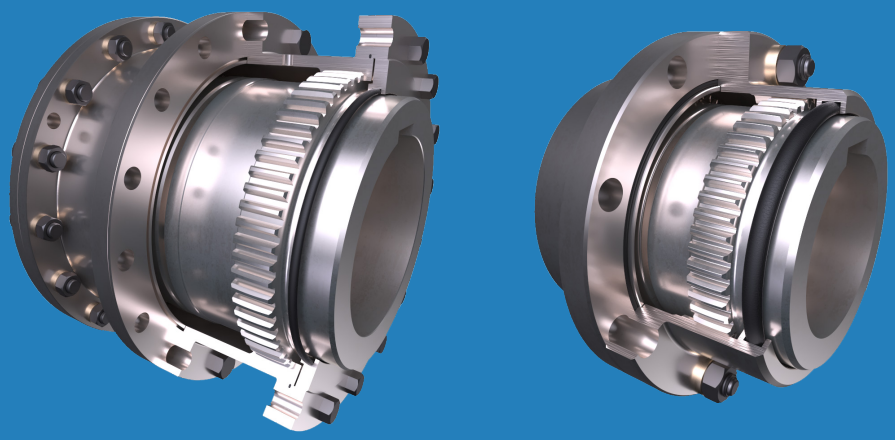

TORQMAX

GEAR COUPLINGS

TORQMAX

GEAR COUPLINGS

GEAR COUPLINGS can carry considerable torques despite their compact sizes. The inner intermediate gear and the hub gear engage each other to transmit the load. This type of all-metal flexible coupling has minimum power losses.

The power is transmitted in this coupling by point contact, with very little surface involved. This can absorb all kinds of misalignment between shafts: angular, axial and small parallel misalignment in a double compact unit plus larger parallel misalignment in a double unit with long intermediate shaft.

Gear couplings may transmit medium, big and very big torques while operating from under 100 1/min up to 8000 1/min without problems if they are properly lubricated.

Currently, GEAR COUPLING manufactures according to AGMA, the de facto international standard, and under JIS, the Japanese Standard. Besides, we may adapt our standard couplings to fit the special needs of our customers.

Parts

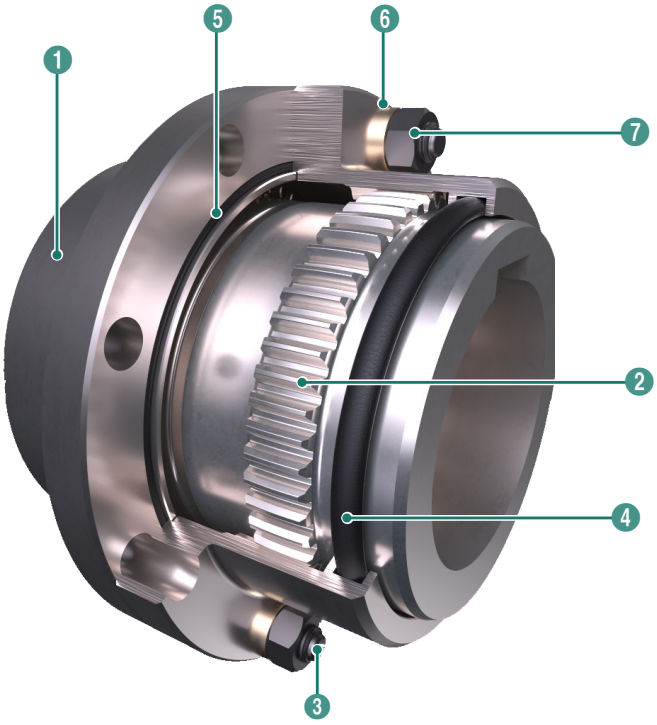

Name of each part

1. Sleeve (A+B) : S45C
2. Flex Hub : S45C
3. Reamer Bolt : S45C-H
4. O-ring : NBR
5. Gasket : UG or O-ring : NBR
6. Spring Washer : HSWR62B
7. Hex. Nut : SS41

Dimensions

AGMA STANDARD

- PG20/PGL20(G20 Type)

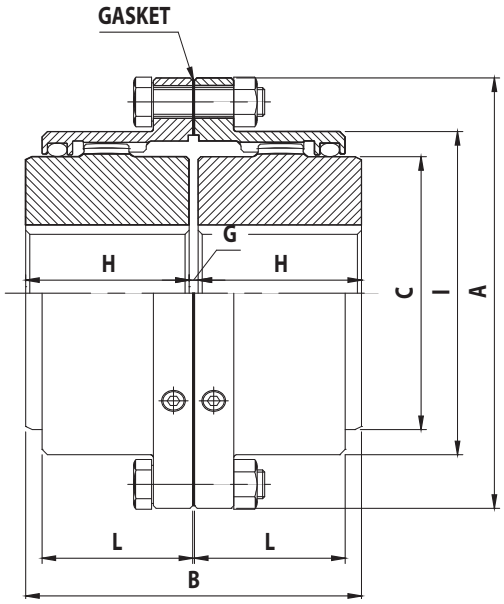

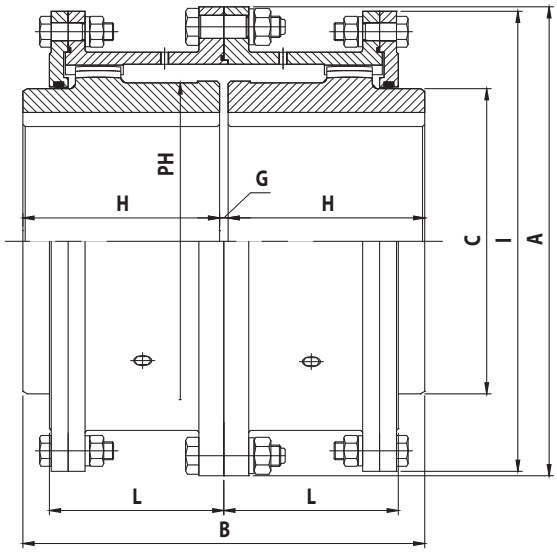

SIZE	MAX SPEED (RPM)	BASIC TORQUE (Nm)	BORE DIA (mm) MAX	BORE DIA (mm) MIN	DIMENSIONS (mm) A	B	C	H	I	L	G	CPLG Weight (Kg)	LUBE WT (Kg)
1010PG20	8,000	859	48	13	115.9	89	69	43	83.8	39	3	4.5	0.04
1015PG20	6,500	1,918	60	19	152.4	101	86	49	105.2	48	3	9.1	0.07
1020PG20	5,600	4,187	73	25	177.8	127	105	62	126.5	59	3	15.9	0.11
1025PG20	5,000	6,450	92	32	212.7	159	131	77	154.9	72	5	29.5	0.23
1030PG20	4,400	12,825	105	38	239.7	187	152	91	180.3	84	5	43.1	0.36
1035PG20	3,900	16,684	124	51	279.4	218	178	106	211.3	98	6	68.0	0.54
1040PG20	3,600	31,146	146	64	317.5	248	210	121	245.4	111	6	97.5	0.91
1045PG20	3,200	34,140	165	76	346.1	278	235	135	274.1	123	8	136.1	1.04
1050PG20	2,900	46,060	178	89	388.9	314	254	153	305.8	141	8	190.5	1.77
1055PG20	2,650	60,352	197	102	425.4	344	279	168	334.3	158	8	249.5	2.22
1060PG20	2,450	77,516	222	114	457.2	384	305	188	366.0	169	8	306.2	3.18
1070PG20	2,150	114,509	254	89	527.0	451.5	343	221	424.9	196	9.5	485.4	4.35

SIZE	MAX SPEED (RPM)	BASIC TORQUE (Nm)	BORE DIA (mm) MAX	BORE DIA (mm) MIN	DIMENSIONS (mm) A	B	C	H	I	L	PH	G	CPLG Weight (Kg)	LUBE WT (Kg)
1080PGL20	1,750	149,033	279	102	590.6	507.5	356	249	571.5	243	368	9.5	703.1	9.53
1090PGL20	1,550	201,469	305	114	660.4	565	394	276	641.4	265	419	13	984.3	12.25
1000PGL20	1,450	281,749	343	127	711.2	623	445	305	698.5	294	470	13	1302.0	14.97
1100PGL20	1,330	386,957	387	140	774.7	679	495	333	749.3	322	521	13	1678.3	17.69
1200PGL20	1,200	493,773	425	152	838.2	719	546	353	825.5	341	572	13	2113.8	20.87

- PG52/PGL52(G52 Type)

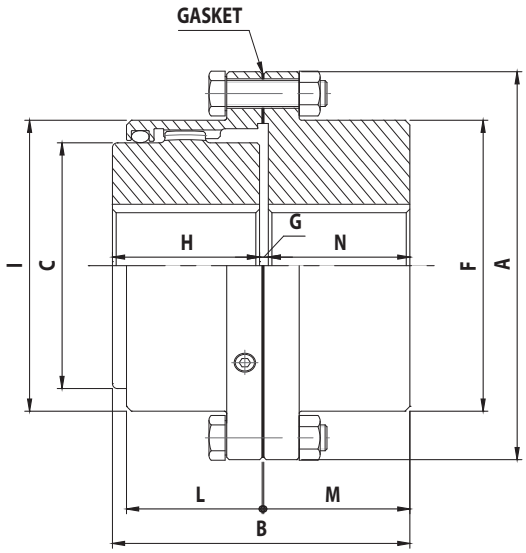

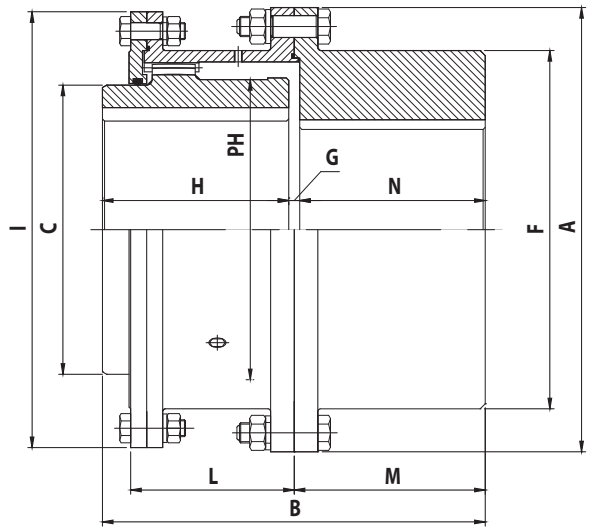

SIZE	MAX SPEED (RPM)	BASIC TORQUE (Nm)	BORE DIA (mm) MAX C	BORE DIA (mm) MAX F	BORE DIA (mm) MIN	DIMENSIONS(mm) A	B	C	F	H	I	L	M	N	G	CPLG Weight (Kg)	LUBE WT (Kg)
1010PG52	8,000	860	48	60	13	115.9	87	69	83.8	43	83.8	39	41.5	40	4	4.5	0.02
1015PG52	6,500	1,919	60	75	19	152.4	99	86	105.2	49	105.2	48	47.5	46	4	9.1	0.04
1020PG52	5,600	4,190	73	92	25	177.8	124	105	126.5	62	126.5	59	60.0	58	4	15.9	0.07
1025PG52	5,000	6,454	92	111	32	212.7	156	131	154.9	77	154.9	72	76.5	74	5	27.2	0.12
1030PG52	4,400	12,834	105	130	38	239.7	184	152	180.3	91	180.3	84	90.5	88	5	43.1	0.18
1035PG52	3,900	16,696	124	149	51	279.4	213.5	178	211.3	106	211.3	98	105.0	102	5.5	61.2	0.27
1040PG52	3,600	31,167	146	171	64	317.5	243	210	245.4	121	245.4	111	118.0	115	7	99.8	0.47
1045PG52	3,200	34,163	165	194	76	346.1	274	235	274.1	135	274.1	123	135.0	131	8	136.1	0.57
1050PG52	2,900	46,091	178	222	89	388.9	308	254	305.8	153	305.8	141	151.0	147	8	195.0	0.91
1055PG52	2,650	60,392	197	248	102	425.4	349	279	334.3	168	334.3	158	177.0	173	8	263.1	1.13
1060PG52	2,450	77,569	222	267	114	457.2	382	305	366.0	188	366.0	169	190.0	186	8	324.3	1.70
1070PG52	2,150	112,300	254	305	89	527.0	454	343	424.9	221	424.9	196	226.5	220	13	508.0	2.27

SIZE	MAX. SPEED (RPM)	BASIC TORQUE (Nm)	Bore Dia (mm) MAX C	Bore Dia (mm) MAX F	Bore Dia (mm) MIN	DIMENSIONS(mm) A	B	C	F	H	I	L	M	N	PH	G	CPLG Weight (Kg)	LUBE WT (Kg)
1080PGL52	1,750	147,394	279	343	102	590.6	511	356	450.8	249	571.5	243	255.5	249	368	13	698.5	4.99
1090PGL52	1,550	200,035	305	381	114	660.4	566	394	508.0	276	641.4	265	283	276	419	14	984.5	6.35
1000PGL52	1,450	280,750	343	406	127	711.2	626	445	530.4	305	698.5	294	313	305	470	16	1,251.9	7.71
1100PGL52	1,330	386,032	387	445	140	774.7	682	495	584.2	333	749.3	322	341	333	521	16	1,637.5	9.07
1200PGL52	1,200	491,313	425	495	140	838.2	722	546	647.7	353	825.5	341	361	353	572	16	2,077.5	10.89

Dimensions

AGMA STANDARD

- PG32(G32 Type Spacer Coupling Double Engagement)

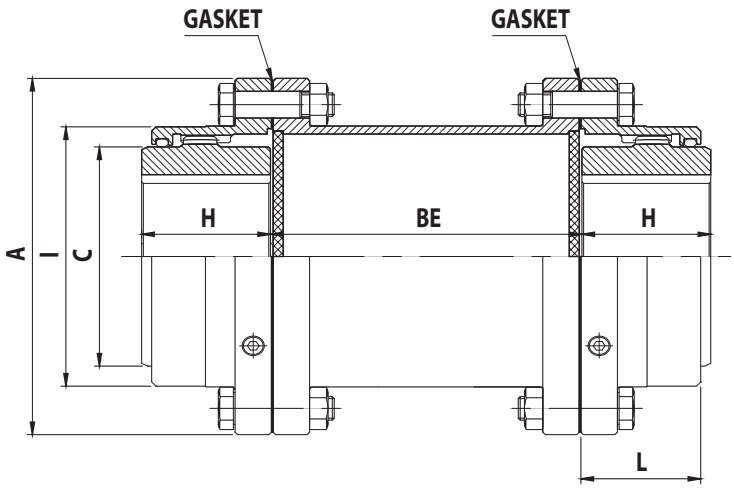

SIZE	MAX SPEED (RPM)	BASIC TORQUE (Nm)	Bore Dia (mm)		Dimensions(mm)							CPLG Weight (Kg)	LUBE WT (Kg)
			MAX	MIN	BE MIN	BE MAX	A	C	H	I	L		
1010PG32	7000	842	48	13	83	311	115.9	69	43	83.8	39	6.8	0.04
1015PG32	5500	1,895	60	19	83	311	152.4	86	49	105.2	48	13.6	0.07
1020PG32	4600	3,509	73	25	83	311	177.8	105	62	126.5	59	20.4	0.11
1025PG32	4000	6,317	92	32	95	311	212.7	131	77	154.9	72	38.6	0.23
1030PG32	3600		105	38	95	311	239.7	152	91	180.3	84	54.4	0.36
1035PG32	3100	16,143	124	51	120	311	279.4	178	106	211.3	98	88.5	0.54
1040PG32	2800	24,566	146	64	120	311	317.5	210	121	245.4	111	122.5	0.91
1045PG32	2600	33,690	165	76	120	311	346.1	235	135	274.1	123	165.6	1.04
1050PG32	2400	45,622	178	89	146	311	388.9	254	153	305.8	141	238.1	1.77
1055PG32	2200	59,659	197	102	146	311	425.4	279	168	334.3	158	306.2	2.22
1060PG32	2100	77,206	222	114	146	311	457.2	305	188	366.0	196	358.3	3.18
1070PG32	1800	112,300	254	127	146	311	527.0	356	221	424.9	196	562.5	4.35

※ Coupling weight is measured without bore amachining.

※ Application of spacer

1. When it is impossible to connect HUBs due to long distance between shaft ends.
2. When it is necessary to prevent transmitting heat and electric currency.

※ 'BE' means the distance between shaft ends. Please notice 'BE' value to the manufacturer, when you order this item.

- PG52F(G52 Type Floating Shaft)

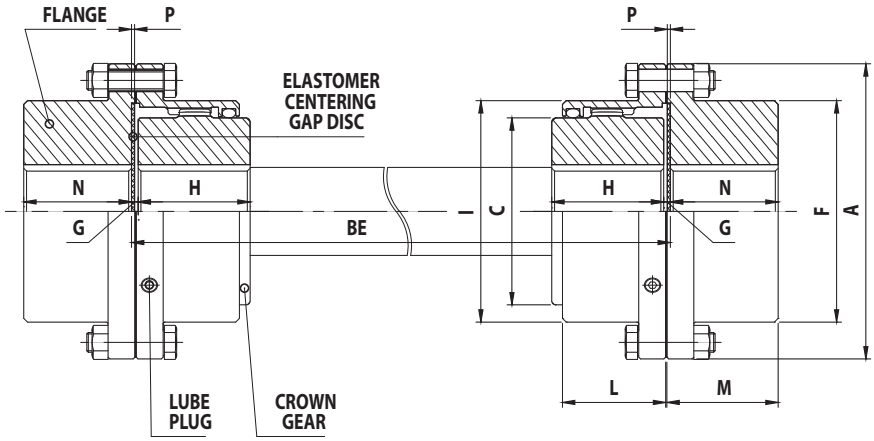

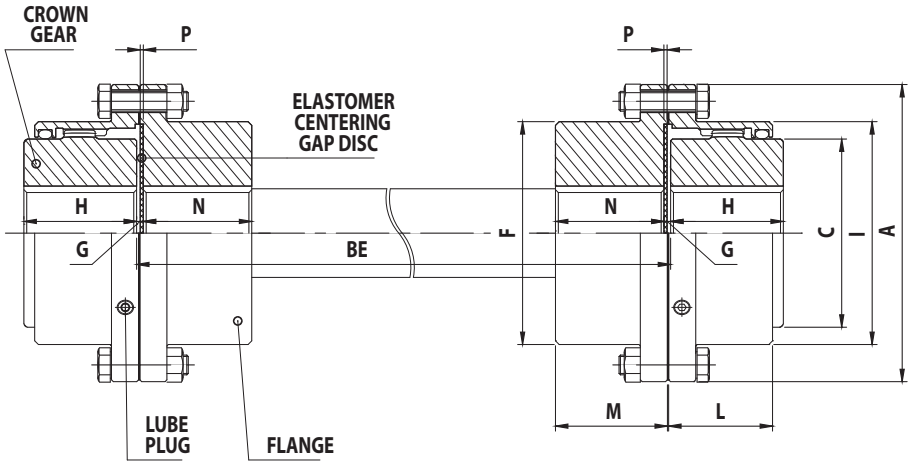

SIZE	MAX SPEED (RPM)	BASIC TORQUE (Nm)	Bore Dia (mm) MAX C	Bore Dia (mm) MAX F	Bore Dia (mm) MIN	BE MIN GFS-R	BE MIN GFS-O	Dimensions(mm) A	C	F	H	I	L	M	N	P	G	CPLG Weight (Kg)	LUBE WT (Kg)
1010PG52F	8000	842	48	60	13	92	133	115.9	69	83.8	43	83.8	39	41.5	40	2.5	4	4.5	0.02
1015PG52F	6500	1,895	60	75	19	105	159	152.4	86	105.2	49	105.2	48	47.5	46	2.5	4	9.1	0.04
1020PG52F	5600	3,509	73	92	25	129	197	177.8	105	126.5	62	126.5	59	60.0	58	2.5	4	15.9	0.07
1025PG52F	5000	6,317	92	111	32	162	241	212.7	131	154.9	77	154.9	72	76.5	74	2.5	5	27.2	0.12
1030PG52F	4400	10,528	105	130	38	189	279	239.7	152	180.3	91	180.3	84	90.5	88	2.5	5	43.1	0.18
1035PG52F	3900	16,143	124	149	51	219	324	279.4	178	211.3	106	211.3	98	105.0	102	2.5	5.5	68.0	0.27
1040PG52F	3600	24,566	146	171	64	248	419	317.5	210	245.4	121	245.4	111	118.0	115	4.1	7	99.8	0.47
1045PG52F	3200	33,690	165	194	76	281	508	346.1	235	274.1	135	274.1	123	135.0	131	4.1	8	136.1	0.57
1050PG52F	2900	45,622	178	222	89	316	533	388.9	254	305.8	153	305.8	141	151.0	147	5.1	8	195	0.91
1055PG52F	2650	59,659	197	248	102	367	572	425.4	279	334.3	168	334.3	158	177.0	173	5.1	8	263.1	1.13
1060PG52F	2450	77,206	222	267	114	397	597	457.2	305	366.0	188	366.0	169	190.0	186	6.6	8	324.3	1.7
1070PG52F	2150	112,300	254	305	89	470	673	527.0	343	424.9	221	424.9	196	226.5	220	8.4	13	508	2.27

Dimensions

JIS STANDARD

- Type PSS (Gear Double), PCC (Gear Double Large)

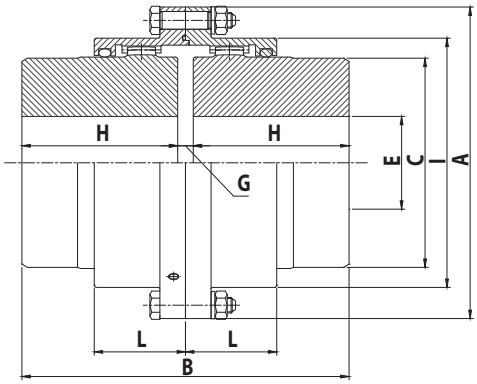

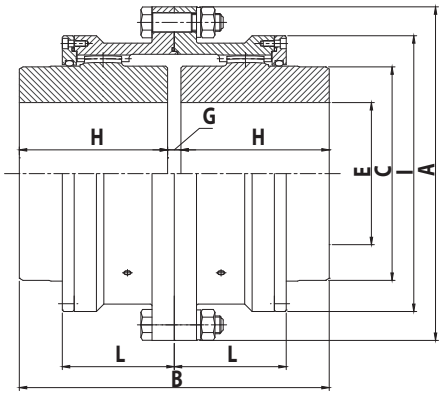

SIZE	MAX SPEED (RPM)	BASIC TORGUE (Nm)	BORE DIA (mm)		Dimensions(mm)							WEIGHT (kg)	LUBE WT (kg)	PSS-H (Nm)
			Max	Min	A	B	C	H	I	L	G			
PSS100	3,600	254	25	16	100	88	46	40	67	34	8	3	0.03	802
PSS112	3,600	617	40	16	112	108	58	50	79	40	8	5	0.04	1,420
PSS125	3,600	1,072	50	31	125	134	70	63	92	43	8	7	0.05	2,410
PSS140	3,600	1,486	56	31	140	150	80	71	107	47	8	9	0.07	3,540
PSS160	3,600	2,250	63	31	160	170	95	80	120	52	10	14	0.09	5,090
PSS180	3,600	3,372	71	45	180	190	105	90	134	56	10	19	0.12	7,730
PSS200	3,600	4,913	80	45	200	210	120	100	149	61	10	26	0.15	12,700
PSS224	3,080	6,987	90	51	224	236	145	112	174	65	12	38	0.25	17,800
PSS250	2,650	9,665	100	51	250	262	165	125	200	74	12	56	0.35	24,200
PSS280	2,340	16,555	125	51	280	294	190	140	224	82	14	83	0.48	32,300
PSS315	1,980	31,653	160	112	315	356	225	170	260	98	16	135	0.77	49,700
PSS355	1,800	39,706	180	125	355	396	250	190	288	108	16	184	0.94	65,800
PSS400	1,570	54,737	200	140	400	418	285	200	329	114	18	261	1.36	92,400
PCC450	1,540	74,705	200	140	450	418	290	200	372	151	18	304	1.79	174,000
PCC500	1,320	117,186	236	170	500	494	335	236	425	168	22	453	2.64	261,000
PCC560	1,170	166,784	265	190	560	552	385	265	475	187	22	664	3.23	408,000
PCC630	990	260,501	280	200	630	658	455	315	548	213	28	1,020	4.93	581,000
PCC710	870	376,696	355	250	710	738	510	355	622	242	28	1,460	6.63	789,000
PCC800	780	537,311	400	280	800	832	570	400	690	267	32	2,090	9.35	1,110,000
PCC900	840	771,115	475	315	900	932	670	450	792	295	32	3,030	12.63	1,510,000
PCC1000	760	1,189,219	510	355	1,000	1,040	720	500	858	322	40	4,120	13.75	1,970,000
PCC1120	682	1,598,179	600	400	1,120	1,160	840	560	990	360	40	5,920	15.45	2,450,000
PCC1250	610	2,120,000	710	500	1,250	1,460	960	710	1,126	399	40	9,410	18.25	3,250,000

- Type PSE (Gear Double), PCE (Gear Double Large)

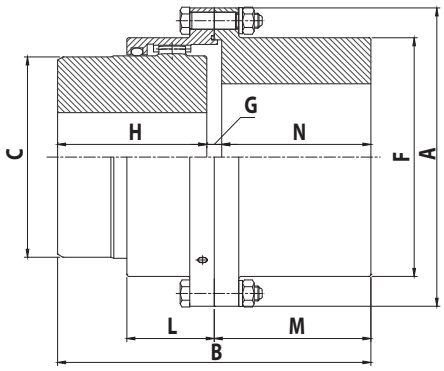

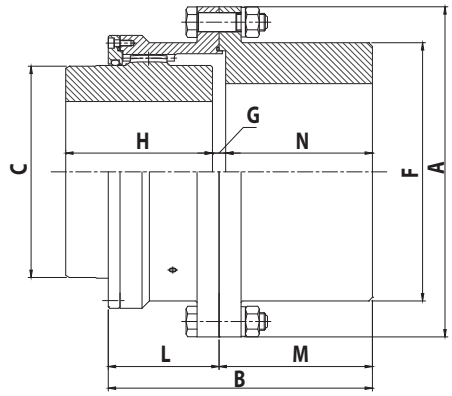

SIZE	MAX SPEED (RPM)	BASIC TORGUE (Nm)	BORE DIA (mm)			Dimensions(mm)								WEIGHT (kg)	LUBE WT (kg)	PSE-H (Nm)
			Max		Min											
			C	F		A	B	C	F	H	L	M	G			
PSE100	3,600	254	28	40	16	100	88	46	67	40	34	44	8	3	0.03	802
PSE112	3,600	562	40	50	16	112	108	58	79	50	40	54	8	5	0.04	1,420
PSE125	3,600	996	50	56	31	125	134	70	92	63	43	67	8	7	0.05	2,410
PSE140	3,600	1,434	56	63	31	140	150	80	107	71	47	75	8	9	0.07	3,540
PSE160	3,600	2,194	63	75	31	160	170	95	120	80	52	85	10	14	0.09	5,090
PSE180	3,600	3,369	71	80	45	180	190	105	134	90	56	95	10	19	0.12	7,730
PSE200	3,600	4,812	80	95	45	200	210	120	149	100	61	105	10	26	0.15	12,700
PSE224	3,080	6,990	90	105	51	224	236	145	174	112	65	118	12	38	0.25	17,800
PSE250	2,650	9,427	100	125	51	250	262	165	200	125	74	131	12	56	0.35	24,200
PSE280	2,340	16,327	125	150	51	280	294	190	224	140	82	147	14	83	0.48	32,300
PSE315	1,980	25,735	16	180	112	315	356	225	260	170	98	178	16	135	0.77	49,700
PSE355	1,800	38,749	180	200	125	355	396	250	288	190	108	198	16	184	0.94	65,800
PSE400	1,570	54,439	200	236	140	400	418	285	329	200	114	209	18	261	1.36	92,400
PCE450	1,540	73,696	200	224	140	450	418	290	352	200	151	209	18	304	1.79	174,000
PCE500	1,320	115,934	236	265	170	500	494	335	404	236	168	245	22	453	2.64	261,000
PCE560	1,170	166,306	265	305	190	560	552	385	460	265	187	276	22	664	3.23	408,000
PCE630	990	259,700	315	355	224	630	658	455	530	315	213	329	28	1,020	4.93	581,000
PCE710	870	372,400	355	400	250	710	738	510	590	355	242	369	28	1,460	6.63	789,000
PCE800	780	533,414	400	450	280	800	832	570	670	400	267	416	32	2,090	9.35	1,110,000
PCE900	840	803,600	475	510	315	900	932	670	792	400	295	466	32	3,030	12.63	1,510,000
PCE1000	760	1,107,400	510	570	355	1000	1040	720	858	450	322	520	40	4,130	13.75	1,970,000
PCE1120	682	1,617,000	600	640	400	1120	1160	840	990	500	360	580	40	5,940	15.45	2,450,000
PCE1250	610	2,077,600	710	800	500	1250	1460	960	1126	560	399	730	40	9,820	18.25	3,250,000

Installation

The operation and life of PTC GEAR Coupling may be highly influenced by how it is installed and used. To successfully operate and use it without trouble, it must be installed and used in accordance with the provided manual.

Mounting procedure (PGD60 or smaller)

1 Select how to mount crown hub after machining the inner diameter correctly. (shrinkage fitting/key fitting)

Clean all components, apply grease on the teeth and O-ring, and then install the O-ring.

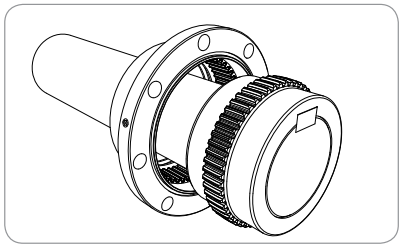

2 Insert the internal sleeve into the shafts, and assemble the crown hub on the both shafts.

Adjust allowable gap and the angular error.

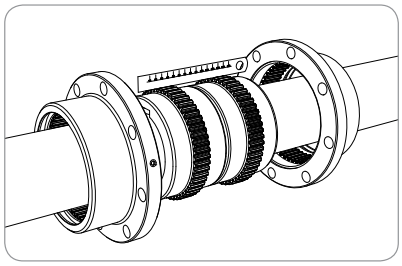

3 As shown in the figure, adjust the parallel error every 90 degrees in circumference using a straight edge ruler so that it does not exceed the error limit specified in the catalog. Then, set the shaft center correctly using the dial gauge.

Insert the O-ring between the internal sleeve and apply grease on crown gear. Then, fasten the bolt to ensure the inlet locates at 90 degrees.

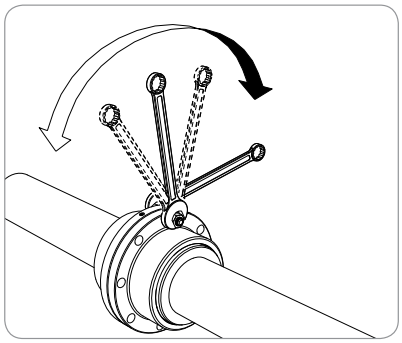

4 Open the lubrication inlet, put grease using a lubrication gun until it overflows, and then fasten the inlet.

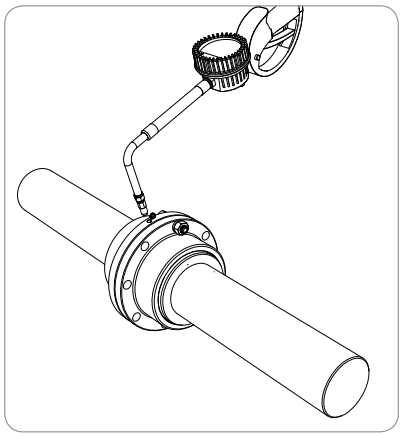

Mounting procedure (PGDL70 or larger)

1 Select how to mount crown hub after machining the inner diameter correctly. (shrinkage fitting/key fitting)

Clean all components, apply grease on the teeth and O-ring, and then install the O-ring.

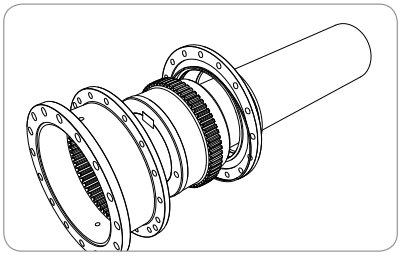

2 Insert the side cover into the shafts, assemble the crown hub, and then assemble the O-ring and internal sleeve.

Adjust allowable gap and the angular error.

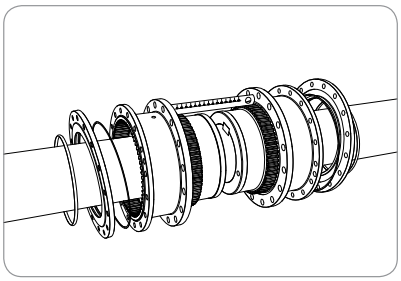

3 As shown in the figure, adjust the parallel error every 90 degrees in circumference using a straight edge ruler so that it does not exceed the error limit specified in the catalog. Then, set the shaft center correctly using the dial gauge.

Ensure the lubricating oil inlet in internal sleeve locates at 90 degrees and fasten the bolt evenly as shown in the figure. The lubricating oil inlet in side cover must perpendicular to the lubricating oil inlet in internal sleeve when assembling the side cover.

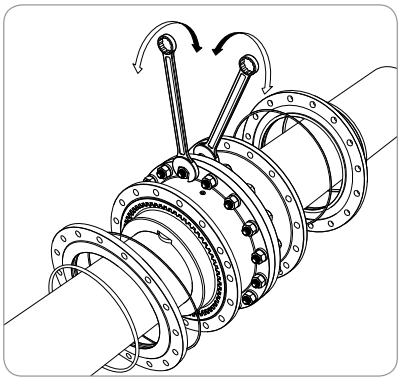

4 Open the lubrication inlet, put grease using a lubrication gun until it overflows, and then fasten the inlet.

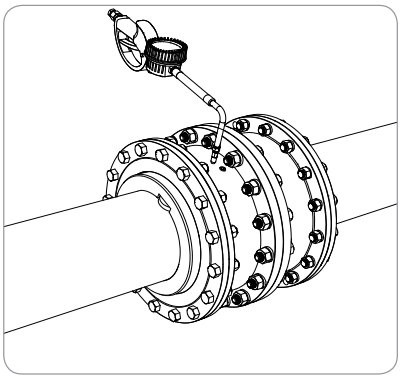

Alignment information

Accurate alignment enables couplings and the associated machineries to maximize the life and to minimize the maintenance. In particular, the life of the couplings is influenced by the power load, the speed at which it is operated, and the injection of lubricating oil. The values listed in the following table can be an indicator for maximizing the life of the couplings, and these values can be applied when they are based on the allowable RPM for each size, keep the specified clearance, use genuine parts, and assemble properly. Each value is also related to the installation of the couplings and the environment.

Parallel Misalignment

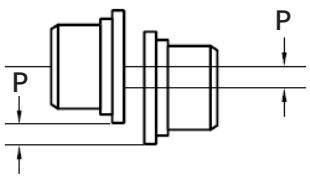

Angular Misalignment

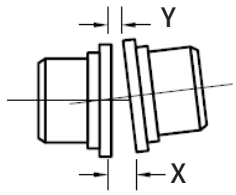

Misalignment Capacity

SIZE	Recommended Installation		Operating		Fastener Tightening Torque values(Nm)
	Parallel Offset-P Max(mm)	Angular (X-Y) Max (mm)	Parallel Offset-P Max(mm)	Angular (X-Y) Max (mm)	
1010PGD	0.05	0.15	0.66	1.80	12
1015PGD	0.08	0.18	0.86	2.26	42
1020PGD	0.08	0.23	1.02	2.74	102
1025PGD	0.10	0.28	1.27	3.43	203
1030PGD	0.13	0.33	1.52	3.99	203
1035PGD	0.15	0.38	1.83	4.65	339
1040PGD	0.18	0.46	2.13	5.49	339
1045PGD	0.20	0.51	2.39	6.15	339
1050PGD	0.23	0.56	2.72	6.65	339
1055PGD	0.28	0.61	3.12	7.32	339
1060PGD	0.28	0.66	3.35	9.98	339
1070PGD	0.33	0.79	3.94	9.32	339
1080PGD	0.41	0.81	2.46	4.83	-
1090PGD	0.43	0.91	2.64	5.49	-
1100PGD	0.48	1.02	2.97	6.15	-
1110PGD	0.56	1.14	3.30	6.81	-
1120PGD	0.58	1.24	3.51	7.49	-

Puller Holes

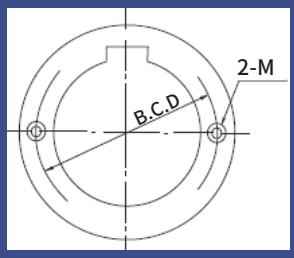

SIZE	B.C.D (mm)	Tap Size
20 PGDL	89	M8
25 PGDL	112	M10
30 PGDL	128	M10
35 PGDL	152	M12
40 PGDL	181	M16
45 PGDL	200	M16
50 PGDL	216	M20

SIZE	B.C.D (mm)	Tap Size
55 PGDL	238	M20
60 PGDL	268	M20
70 PGDL	305	M24
80 PGDL	318	M24
90 PGDL	356	M30
100 PGDL	394	M30
110 PGDL	426	M30
120 PGDL	498	M30