All about Specialized universal joints

UJ TECH

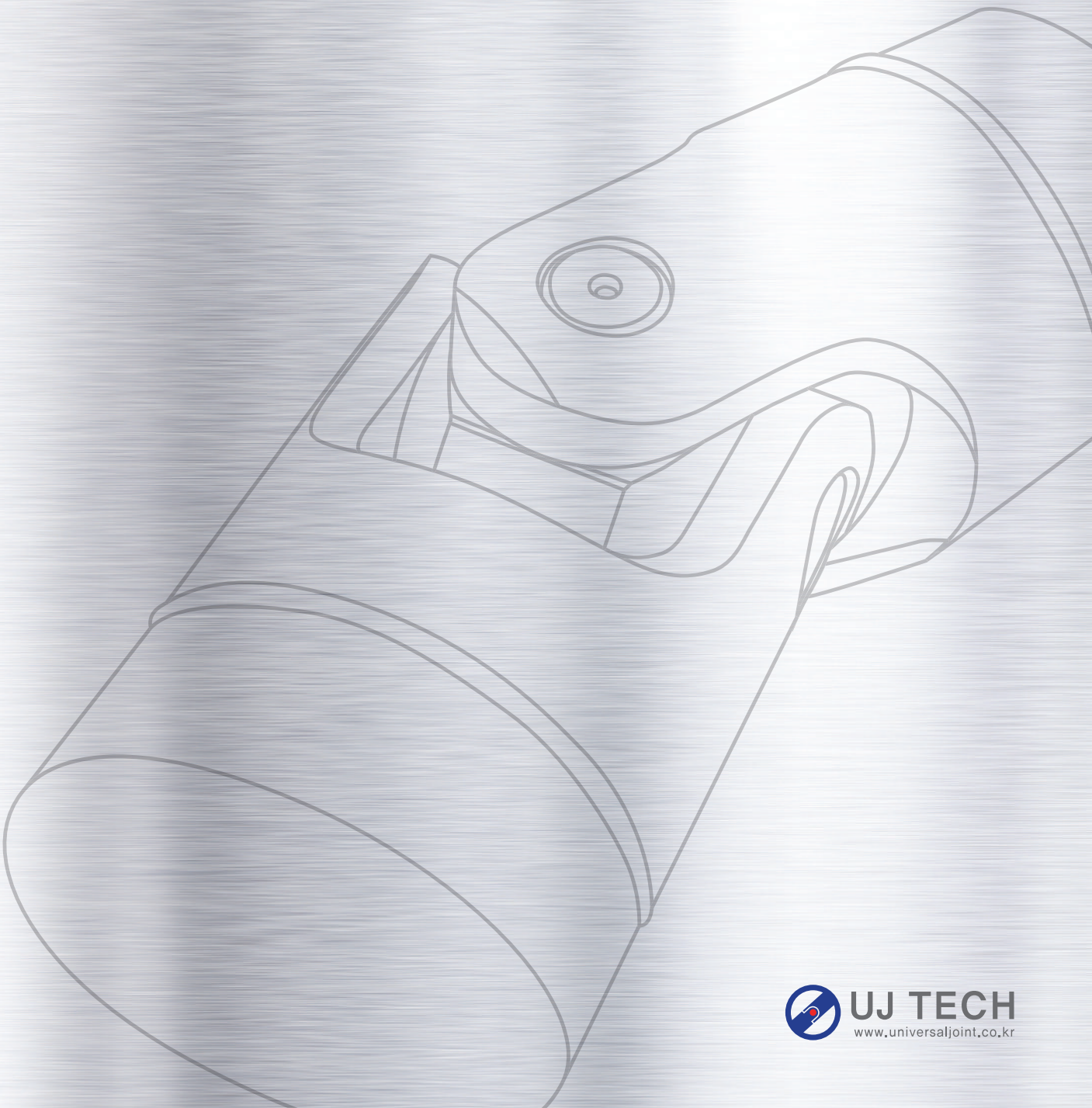

UJ TECH
www.universaljoint.co.kr

About
COMPANY 회사소개

Let us be your world best partner!

As a specialized manufacturer of universal joints in Korea, UJ Tech has developed to become a competitive solution provider equipped with a number of patents and rich experience since its establishment in 1982.

Supplying its products to various sectors, including steel facility manufacturers, shipbuilders, paper manufacturing companies, industrial machinery makers and special vehicle makers, UJ Tech strives constantly to fulfill its commitment to the highest quality, fast delivery and best after-sales service for the improvement of customers' competitiveness.

Please do not hesitate to contact us if you have any questions on universal joints. We will provide you not only with the most accurate information, but also the right solution for your needs.

Thank you.

CEO Park Bae Sik
대표이사 박 배 식

저희 UJ TECH는 1982년에 설립하여 오랜 노하우와 연구개발을 통해 다수의 특허기술을 보유하고 있는 Universal Joint 제조 업체입니다.
현재 철강설비 제조업체, 제철공장, 조선, 제지, 특장차, 산업용 기계 제조 업체 등 다수의 설비에 납품/장착되어 품질을 인정받고 있으며, 최고의 품질, 최상의 A/S, 신속한 납기를 실천하는 UJ TECH가 되도록 노력하고 있습니다.
Universal Joint에 관한 모든 궁금증 및 문제는 저희 UJ TECH가 해결해 드릴 것을 약속드리며, 귀사의 무궁한 발전을 기원합니다.

| Usage of the Universal Joint 유니버설조인트의 용도 |

A power transfer unit used when the driving axle is relatively far from the driven axle, when the two axles are not in a line or when the driven object is variable. Power can be transferred even if two axles are not in line or when the angle of the driven object is changeable.

구동축과 피구동축이 비교적 떨어진 위치에 있으며, 두 축이 나란하지 않거나 피구동체가 유동적인 경우에 사용되는 동력전달장치이다. 즉, 2개의 축이 나란히 정렬되어 있지 않아도 동력전달이 가능하며, 각도변화가 있는 피구동체에 효율적으로 동력을 전달 할 수 있다.

| Major Customers 주요 사용처 |

Ironmaking machines, Rolling mill plants, Calender drives, Paper machines, Special vehicles, Rail-way vehicles, Marine drives, Pump drives, General machinery construction plants

철강제조업, 압연롤 구동용, 캘린더 구동용, 제지 공장, 자동차, 전철 및 기차, 조선 및 선박, 펌프 구동용, 일반 산업용 기계의 동력전달장치

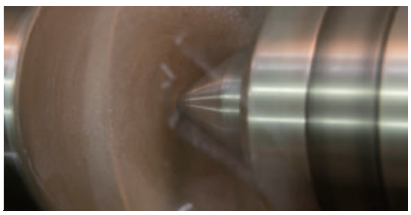

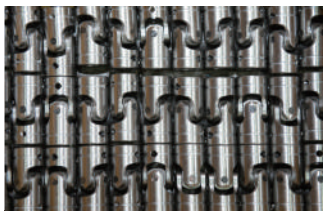

| Certification and Patents 인증 및 특허 |

INNO-BIZ Certificate (2014)

INNO-BIZ확인서 (2014년)

ISO9001 (2008)

ISO9001 (2008년)

Patent No. 10-0656886
Coupling for High-Load

특허 제10-0656886호
고하중용축이음

Design Certificate

디자인등록증

Design Certificate

디자인등록증

Patent No. 10-0833822
(Linking device for roller levelers)

특허 제10-0833822호
(롤러레벨라의 연결기구)

Trademark registration
certificate

상표등록증

R&D division certificate

연구개발전담부서 인정서

Patent No. 10-0562037
(Lubricant Supply System)

특허 제10-0562037호
(윤활유공급구조)

Korean Trade Association

한국무역협회

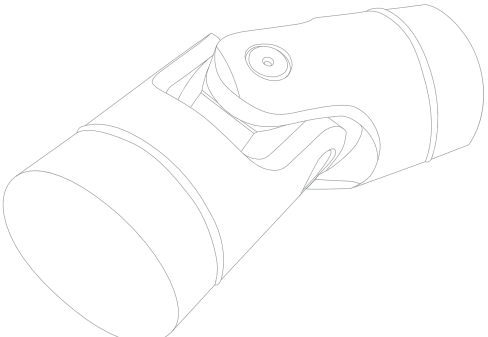

UL-TYPE Universal Joints

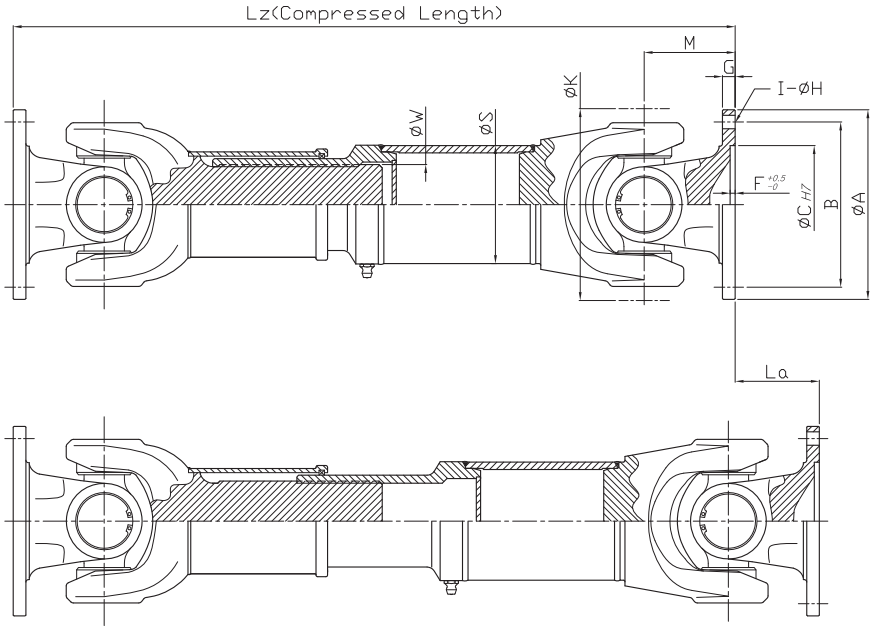

<CARDAN SHAFT-TYPE>

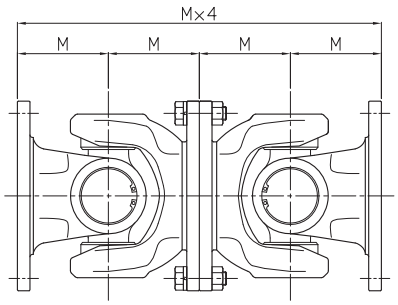

<DOUBLE-TYPE>

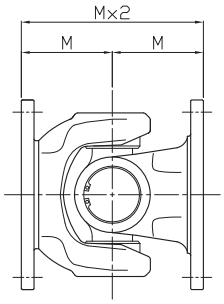

<SINGLE-TYPE>

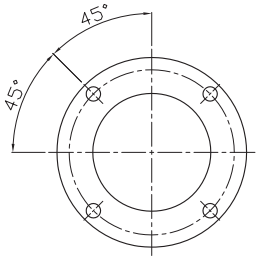

<4-HOLE FLANGE>

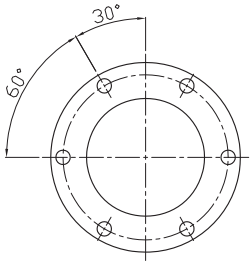

<6-HOLE FLANGE>

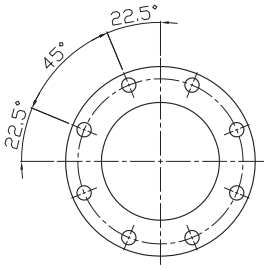

<8-HOLE FLANGE>

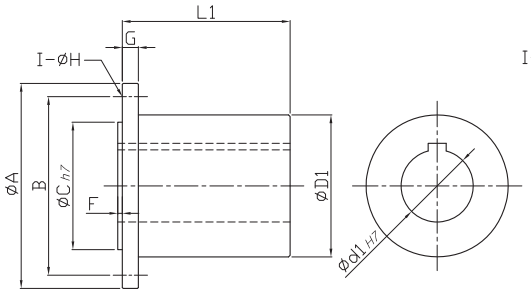

<FLANGE1-TYPE>

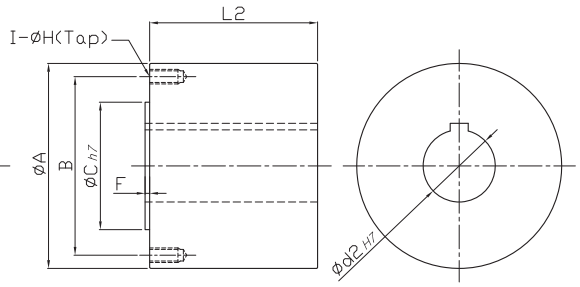

<FLANGE2-TYPE>

Product name		UL58	UL65	UL75(6h)	UL75(4h)	UL90	UL100	UL120	UL150	UL160	UL180	UL200
DIN	Standard	473.10	473.20	473.30		287.00	287.10	287.20	587.15	587.20	587.30	587.35
Bearing	mm	Ø18x47	Ø18x47	Ø23.8x61.3	Ø25x63.8	Ø27x81.75	Ø27x81.75	Ø35x96.8	Ø42x117.5	Ø48x116.5	Ø52x133	Ø57x152
Tcs	Nm	150	250	400	550	1100	1800	2700	5000	6500	10000	15000
Tdw	Nm	110	150	300	400	400	700	1000	1800	2700	4000	6500
β (angle)	°	24	24	24	16	24	24	35	30	30	30	30
A (flange)	mm	58	65	75		90	100	120	150	160	180	200
K (swing dia.)	mm	62	62	78		96	96	116	138	145	158	170
B (pcd)	mm	47	52	62		74.5	84	101.5	130	140	155.5	175
C	mm	30	35	42		47	57	75	90	100	110	125
F	mm	2.5	2.5	2.5		3	3	3	3	4	4	5
G	mm	4	4	6	6.5	7	7	8	10	10	12	14
I (qty of holes)	-	4	4	6	4	4	6	8	8	8	8	8
H	mm	5	6	6		8.5	8.5	10	12	12	14	14
M	mm	32	32	42	40	55	55	70	72	82	92	100
S (tube)	mm	42.7x3.6	42.7x3.6	55x5	50.8x2.4	60.5x3.65	60.5x3.65	73x5.2	89.1x7.6	89.1x7.6	89.1x7.6	101.6x8.1
W (spline)	-	25-m1.25	25-m1.25	30-m1.667	33.33-m1.667	36-m2	36-m2	42-m2	50-m1.5	65-m2.5	65-m2.5	75-m2.5
Lz (min.)	mm	262	262	319	295	345	345	430	480	480	583	648
La (stroke)	mm	60	60	100	50	60	60	100	120	120	120	120
G	kg	2	2	3.7	6.16	5.7	5.7	12	24	26	35	46.5
Gr	kg	3.47	3.47	6.165	2.865	5.1	5.1	8.7	15.3	15.3	15.3	18.68
d1 (max.)	mm	20	25	30		35	40	50	60	70	80	85
D1 (max.)	mm	35	40	50		55	64	80	105	110	125	130
L1	mm	30	40	48		55	63	80	90	110	125	140
d2 (max.)	mm	35	40	45		55	60	70	90	95	110	120
L2	mm	56	63	70		90	90	110	140	160	180	180

* Tcs : Functional limit Torque
* Lz(Order Production) Shortest possible compressed length
* G : Weight of shaft
* Tdw : Fatigue Torque
* La : Length compensation
* Gr : Weight per 1,000mm tube
* β : Maximum deflection angle per joint
* Lz + La : Maximum operating length

| How to Order : UL 150 x 1500 (+110)

TYPE A LZ La

UT-TYPE Universal Joints

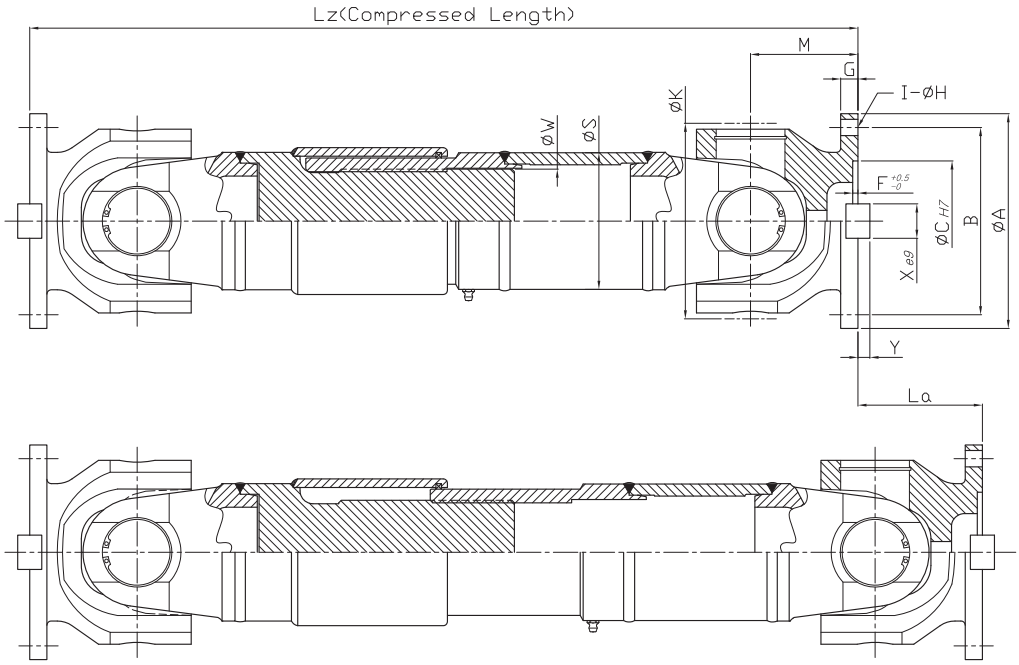

<CARDAN SHAFT-TYPE>

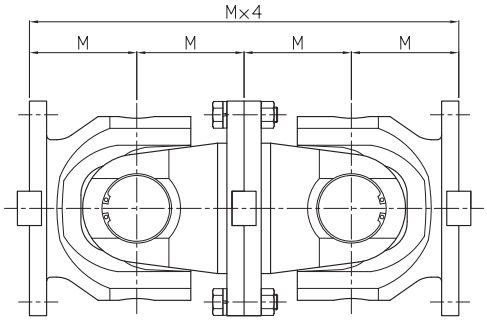

<DOUBLE-TYPE>

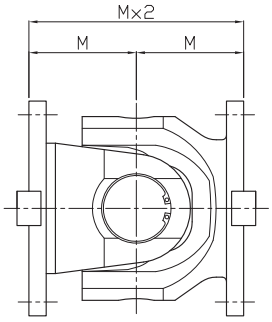

<SINGLE-TYPE>

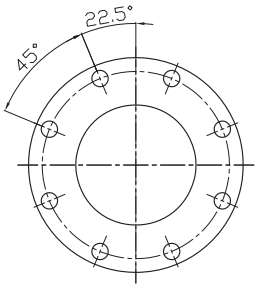

<8-HOLE FLANGE>
(100~225)

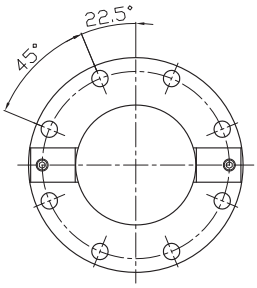

<8-HOLE FLANGE>
(250~285)

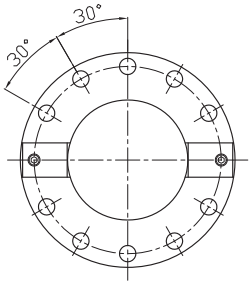

<10-HOLE FLANGE>
(315~390)

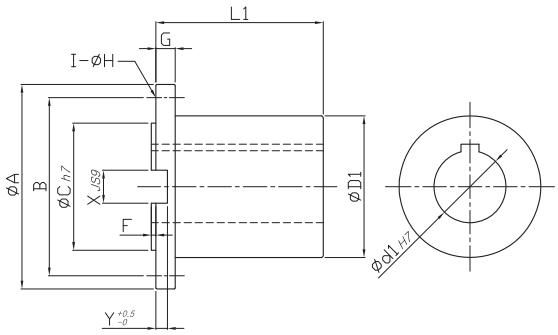

<FLANGE1-TYPE>

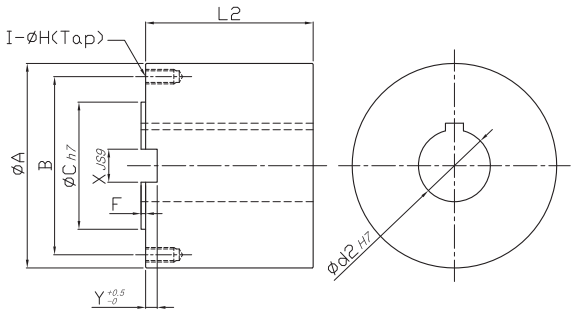

<FLANGE2-TYPE>

Product name		UT100	UT120	UT150	UT160	UT180	UT225	UT250	UT285	UT315	UT350	UT390
Bearing	mm	Ø32x92(57)	Ø39.68x117	Ø52x133	Ø52x133	Ø57x152	Ø68x166	Ø95x217	Ø110x247	Ø120x275	Ø135x307	Ø160x334
Tcs	kNm	2.4	5	10	10	15	35	80	120	160	225	320
Tdw	kNm	0.7	1.6	4	4	6.5	13	40	58	80	110	160
β (angle)	°	24	35	30	30	30	24	15	15	15	15	15
A (flange)	mm	100	120	150	160	180	225	250	285	315	350	390
K (swing dia.)	mm	98	136	158	158	170	198	250	285	315	350	390
B (pcd)	mm	84	101.5	130	140	155.5	196	218	245	280	310	345
C	mm	57	75	90	100	110	140	140	175	175	220	250
F	mm	3	3	3	4	4	5	6	6	7	7	8
G	mm	10	10	12	12	14	20	25	27	32	35	40
I (qty of holes)	-	6	8	8	8	8	8	8	8	10	10	10
H	mm	9	10	12	12	14	16.5	19	21	23	23	25
M	mm	62	72	92	92	100	115	160	180	200	220	240
X	mm	-	-	-	-	-	-	40	40	40	50	70
Y	mm	-	-	-	-	-	-	12.5	15	15	16	18
S (tube)	mm	76.3x3.65	90x80	89.1x7.6	89.1x7.6	101.6x8.1	145x10	168x14	194x16	216x18.2	273x19	273x36
W (spline)	-	33.33-m1.667	50-m1.5	65-m2.5	65-m2.5	75-m2.5	80-m2.5	115-m2.5	150-m3	150-m3	185-m5	185-m5
Lz (min.)	mm	310	425	590	590	630	730	960	1055	1165	1270	1420
La (stroke)	mm	40	120	120	120	120	120	140	140	140	150	170
G	kg	6	16	33	34	46.5	68.5	172	263	382	532	738
Gr	kg	6.54	10.48	15.3	15.3	18.7	33.3	53	70	88.9	119	210.4
d1 (max.)	mm	40	50	60	70	80	105	115	130	155	170	190
D1 (max.)	mm	64	80	105	110	125	172	191	215	248	278	309
L1	mm	63	80	90	110	125	160	175	200	235	255	285
d2 (max.)	mm	60	70	90	95	110	140	155	175	195	215	240
L2	mm	90	110	140	160	180	210	235	270	300	330	370

* Tcs : Functional limit Torque
* Lz(Order Production) Shortest possible compressed length
* G : Weight of shaft
* Tdw : Fatigue Torque
* La : Length compensation
* Gr : Weight per 1,000mm tube
* β : Maximum deflection angle per joint
* Lz + La : Maximum operating length

| How to Order : UT 150 x 1500 (+120)

TYPE A LZ La

UK-TYPE Universal Joints

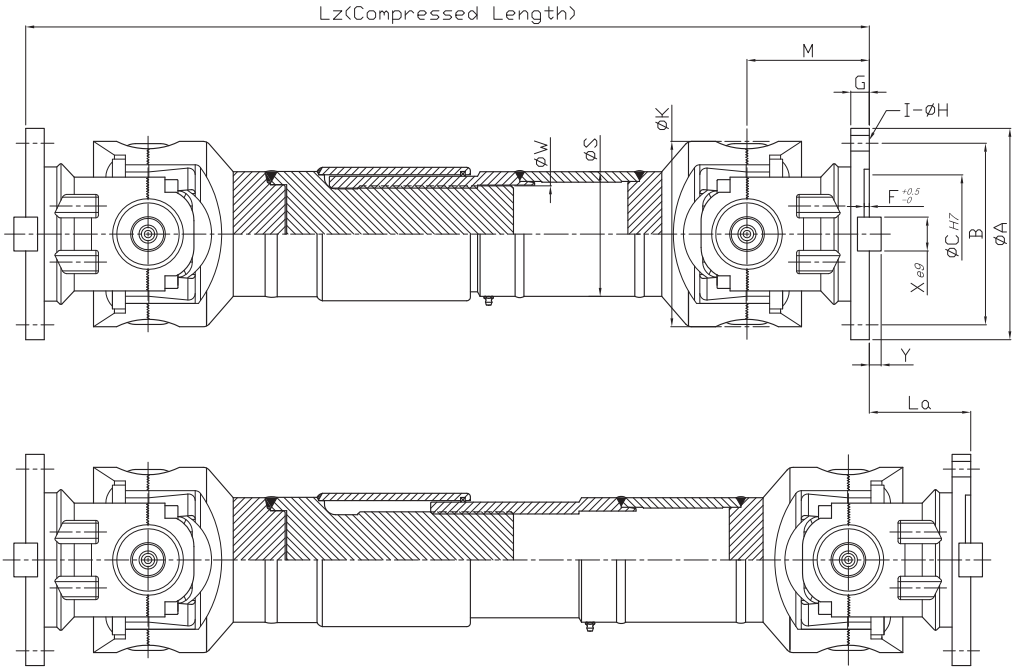

<CARDAN SHAFT-TYPE>

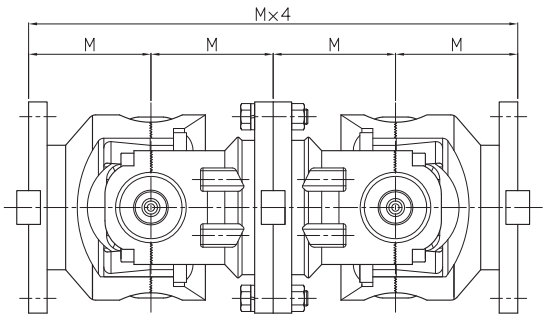

<DOUBLE-TYPE>

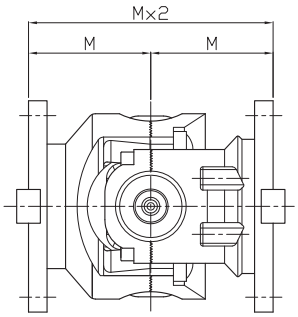

<SINGLE-TYPE>

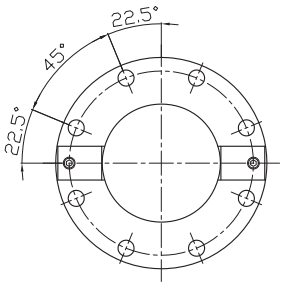

<8-HOLE FLANGE>

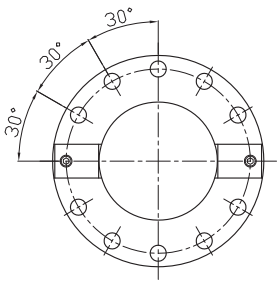

<10-HOLE FLANGE>

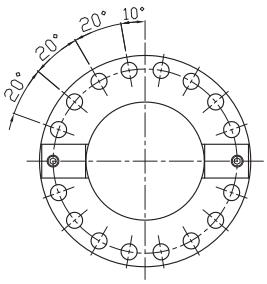

<16-HOLE FLANGE>

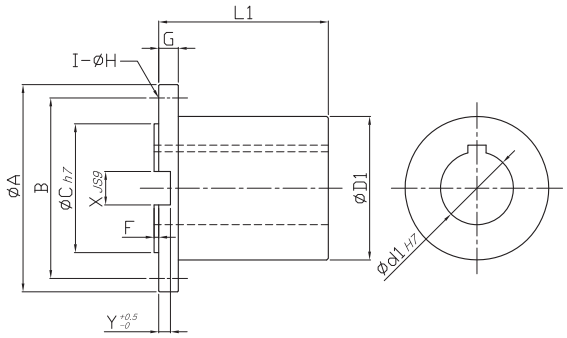

<FLANGE1-TYPE>

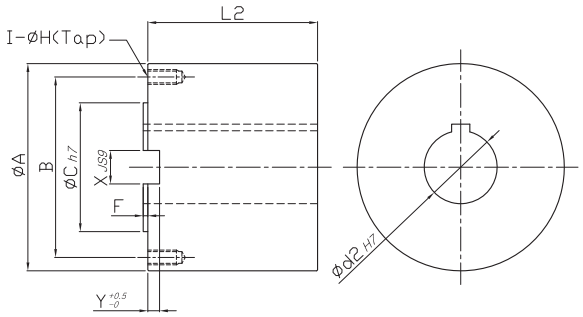

<FLANGE2-TYPE>

Product name		UK225	UK250	UK285	UK315	UK350	UK390	UK435	UK480	UK550
Bearing	mm	Ø88x218x124	Ø95x244x138	Ø110x276x156	Ø125x304x176	Customize	Customize	Customize	Customize	Customize
Tcs	kNm	56	80	112	160	224	315	450	630	900
Tdw	kNm	28	40	56	80	112	158	225	315	450
β (angle)	°	15	15	15	15	15	10	10	10	10
A (flange)	mm	225	250	285	315	350	390	435	480	550
K (swing dia.)	mm	225	250	285	315	350	390	435	480	550
B (pcd)	mm	196	218	245	280	310	345	385	425	492
C	mm	140	140	175	175	220	250	280	320	380
F	mm	5	5	7	8	8	8	10	12	12
G	mm	20	25	27	32	35	40	42	47	50
I (qty of holes)	–	8	8	8	10	10	10	16	16	16
H	mm	17	19	21	23	23	25	28	31	31
M	mm	145	165	180	205	225	215	245	275	305
X	mm	32	40	40	40	50	70	80	90	100
Y	mm	9	12.5	15	15	16	18	20	22.5	22.5
S (tube)	mm	152x13.5	168x14	194x16	216.3x18.2	267.4x21.4	273x24.5	318.5x33.3	355.6x35.7	406.4x40.5
W (spline)	–	110–m2.5	130–m3	150–m3	150–m3	185–m5	185–m5	210–m5	210–m5	240–m5
Lz (min.)	mm	890	1010	1090	1240	1310	1430	1620	1820	2035
La (stroke)	mm	100	135	135	170	170	170	170	190	210
G	kg	129	214	272	406	493	732	1055	1468	2209
Gr	kg	46.1	53	70	88.9	130	150	234	281.6	365.4
d1 (max.)	mm	105	115	130	155	170	190	215	235	275
D1 (max.)	mm	172	191	215	248	278	309	344	379	446
L1	mm	160	175	200	235	255	285	325	355	415
d2 (max.)	mm	140	155	175	195	215	240	270	300	340
L2	mm	210	235	270	300	330	370	405	450	510

* Tcs : Functional limit Torque
* Lz(Order Production) : Shortest possible compressed length
* G : Weight of shaft
* Tdw : Fatigue Torque
* La : Length compensation
* Gr : Weight per 1,000mm tube
* β : Maximum deflection angle per joint
* Lz + La : Maximum operating length

| How to Order : UK 225 x 1500 (+100)

TYPE A LZ La

UH-TYPE Universal Joints

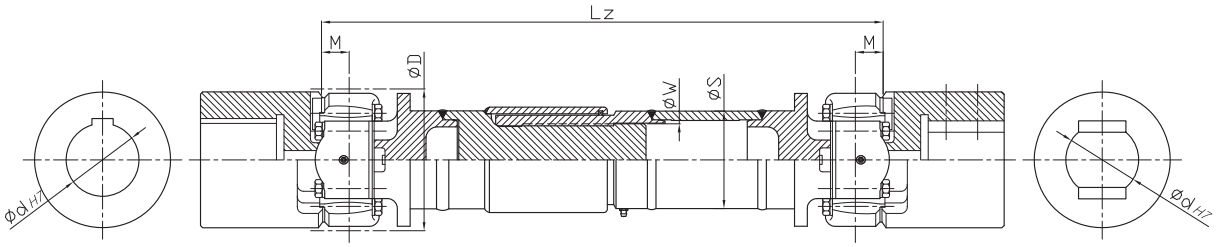

Product name		UH300	UH350	UH400	UH425	UH450	UH500	UH550	UH600	UH650	UH700	UH750
Tcs	kNm	190	300	445	536	634	847	1180	1500	1890	2353	2940
Tdw	kNm	65	110	170	209	250	347	470	620	786	980	1240
β (angle)	°	10	10	8	8	8	8	6	6	6	6	6
D	mm	300	350	400	425	450	500	550	600	650	700	750
M	mm	60	70	80	86	92	107	116	125	136	146	155
S (tube)	mm	244.5x28	273x30	323.9x36	355.6x40	406.4x40	457x50	Customize	Customize	Customize	Customize	Customize
W (spline)	–	185–m5	210–m5	210–m5	210–m5	240–m5	290–m8	Customize	Customize	Customize	Customize	Customize
Lz (min.)	mm	965	1080	1220	1284	1348	1503	1604	1730	1849	1949	2090
La (stroke)	mm	135	155	175	185	195	205	220	235	250	265	290
G	kg	477	767	1125	1351	1627	2227	Customize	Customize	Customize	Customize	Customize
Gr	kg	149	180	255.6	311.3	361.4	501.94	Customize	Customize	Customize	Customize	Customize
d (max.)	mm	185	215	250	265	280	310	340	375	400	435	465

* Tcs : Functional limit Torque
* Lz(Order Production) : Shortest possible compressed length
* G : Weight of shaft
* Tdw : Fatigue Torque
* La : Length compensation
* Gr : Weight per 1,000mm tube
* β : Maximum deflection angle per joint
* Lz + La : Maximum operating length

| How to Order : UH 300 x 1500 (+135)

TYPE D LZ La

UE-TYPE

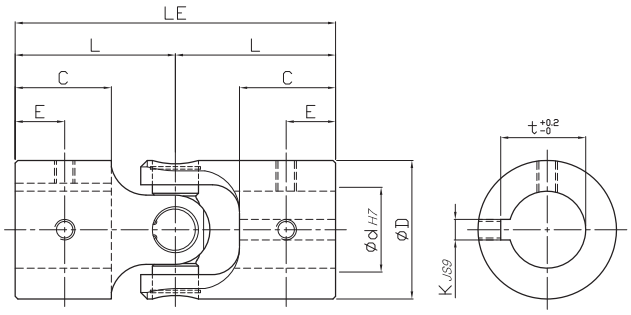

Product name		UE20	UE25	UE30	UE35	UE40	UE50	UE60
Bearing	mm	Ø16x40(24.5)	Ø18x47	Ø20.1x57(35)	Ø25x63.8(41.2)	Ø27x81.75	Ø32x92(57)	Ø37x104(67)
Tcs	Nm	150	250	400	550	1,100	1,800	3,800
Tdw	Nm	110	150	240	400	400	700	1,600
β (angle)	°	25	25	25	25	25	25	25
d	mm	20	25	30	35	40	50	60
D	mm	43	54	62	69	96	99	114
LE	mm	86	110	140	200	200	270	300
L	mm	43	55	70	100	100	135	150
C	mm	23	30	40	60	60	80	84
E	mm	11.5	14	20	30	30	40	42
K	mm	6	8	8	10	12	14	18
t	mm	22.8	28.3	33.3	38.3	43.3	53.8	64.4
M	mm	6	8	8	10	12	14	16

* Tcs : Functional limit Torque
* Tdw : Fatigue Torque
* β : Maximum deflection angle per joint

| How to Order : UE 25 K8 x D54 x 110

TYPE d K(Key width) D LE

UC-TYPE Universal Joints

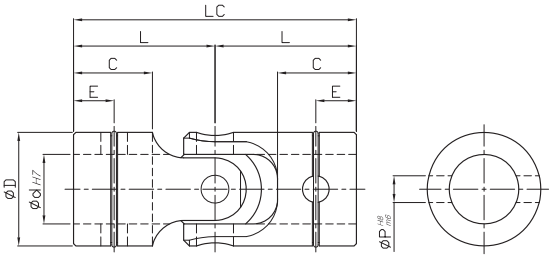

<PIN-TYPE>
UC**P

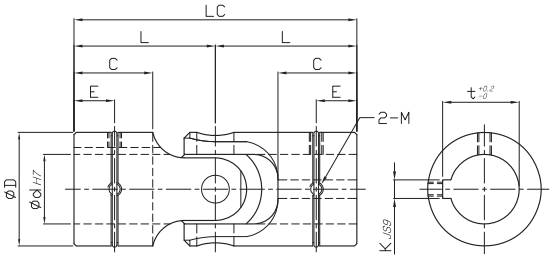

<KEY-TYPE>
UC**K

Product name		UC06	UC08	UC10		UC12		UC14		UC16		UC18		UC20	
		-D12	-D15	-D19	-D20	-D23	-D24	-D26	-D28	-D30	-D32	-D33	-D36	-D36	-D40
Allowable conditional variable		32,000	48,000	80,000		121,000		151,000		200,000		232,000		273,000	
Max. Speed	min^{-1}	2,500	2,200	2,000		1,800		1,600		1,400		1,200		1,000	
Tcs	Nm	16	35	83	185	140	200	200	500	310	600	400	900	530	1,200
Tdw	Nm	5	12	27	62	46	67	66	167	102	200	132	300	175	400
β (angle)	°	30	30	30		30		30		30		30		30	
d	mm	6	8	10		12		14		16		18		20	
D	mm	12	15	19	20	23	24	26	28	30	32	32	36	36	40
LC	mm	31	36	42	68	52	84	59	94	74	104	81	120	87	124
L	mm	15.5	18	21	34	26	42	29.5	47	37	52	40.5	60	43.5	62
C	mm	9	10	12	23	15	29	17	31.5	22	34.5	23.5	40	25	40
E	mm	4.5	5	6	9	7.5	14	8.5	15	11	17	11.75	20	12.5	20
P	mm	3	3.5	4.5	–	5	–	5.8	–	6.5	–	7	–	8	–
K	mm	–	–	3 (4)		4 (4)		5 (5)		5 (5)		6 (5)		6 (5)	
t	mm	–	–	11.4 (11.5)		13.8 (13.5)		16.3 (16)		18.3 (18)		20.8 (20)		22.8 (22)	
M	mm	3	3	5	3	5	4	6	5	6	5	6	6	6	6
KC (Rubber)	mm	–	25	32	32	35	–	40	–	46	–	52	58	58	–
DQ	mm	–	–	–	–	–	–	–	–	–	–	–	–	–	–
EQ	mm	–	–	–	–	–	–	–	–	–	–	–	–	–	–
I	mm	–	–	–	–	–	–	–	–	–	–	–	–	–	–
R	mm	–	–	–	–	–	–	–	–	–	–	–	–	–	–
JQ	mm	–	–	–	–	–	–	–	–	–	–	–	–	–	–
KQ	mm	–	–	–	–	–	–	–	–	–	–	–	–	–	–
tQ	mm	–	–	–	–	–	–	–	–	–	–	–	–	–	–
Ts	kg	530	784	1,300	1,450	2,300	3,300	2,600	4,700	3,900	5,480	4,400	5,940	5,200	8,330
Weight	g	15	30	55	130	110	200	155	400	260	520	345	700	465	1,060

* Refer to "Allowable Conditional Variables" on Page 19 before selecting one.
* Tcs : Functional limit Torque
* Tdw : Fatigue Torque
* β : Maximum deflection angle per joint
* Ts : Static tensile load

| How to Order : UC 25 K7 or P or Q7 x D44 x 105 ex) UC25K7xD44x105

TYPE | d | K(Key width) or P or KQ(Key width) | D | LC

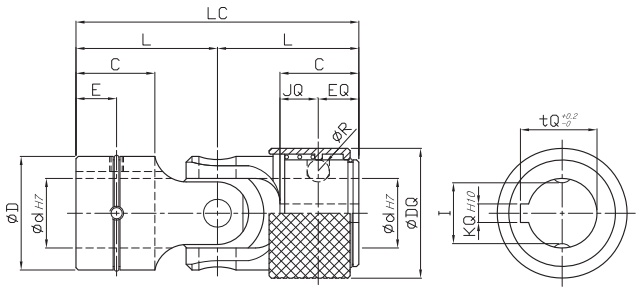

<Quick Change-TYPE>
UC**Q

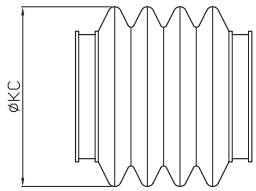

<RUBBER>

UC22		UC25		UC30		UC35		UC40		UC45		UC50	
–D40	–D44	–D44	–D50	–D50	–D60	–D60	–D70	–D67	–D80	–D75	–D90	–D83	–100
344,000		406,000		531,000		711,000		718,000		1,150,000		1,400,000	
900		800		700		600		500		400		300	
760	1,440	1,000	2,540	1,500	3,300	2,400	5,300	3,600	10,000	4,800	12,600	5,800	15,200
251	480	330	847	495	1,100	792	1,767	1,188	3,333	1,584	4,200	1,914	5,067
30		30		30		30		30		30		30	
22		25		30		35		40		45		50	
39	44	44	50	49	60	59	70	67	80	75	90	83	100
94	130	105	140	122	178	140	200	157	228	176	250	191	270
47	65	52.5	70	61	89	70	100	78.5	114	88	125	95.5	135
27	41	30	43	35	56	40	62	45	70	50	76	55	80
13.5	20	15	21	17.5	28	20	31	22.5	35	25	38	27.5	50
9	–	10	–	11.5	–	13	–	14.5	–	16	–	17.5	–
6 (7)		8 (7)		8 (7)		10 (10)		12 (10)		14 (12)		14 (12)	
24.8 (25)		28.3 (28)		33.3 (33)		38.3 (38.5)		43.3 (43.5)		48.8 (48.5)		53.8 (53.5)	
6	6	8	8	8	10	10	10	10	10	10	12	10	12
–	68	68	82	82	–	–	–	–	–	–	–	–	–
–	–	49	50	56	60	64	70	–	–	–	–	–	–
–	–	15	20.5	17.5	25	20	28	–	–	–	–	–	–
–	–	21.54	23	26.95	28	32	32	–	–	–	–	–	–
–	–	4.4	5	4.8	5	4.8	6	–	–	–	–	–	–
–	–	15	22.5	17.5	31	20	34	–	–	–	–	–	–
–	–	7		7		10		–	–	–	–	–	–
–	–	28		33		38.5		–	–	–	–	–	–
6,800	9,200	8,100	12,190	10,000	17,800	14,000	23,698	18,000	34,125	22,000	43,130	28,000	50,978
630	1,300	790	1,820	1,160	2,800	2,255	4,600	2,730	7,000	4,350	10,000	5,200	13,000

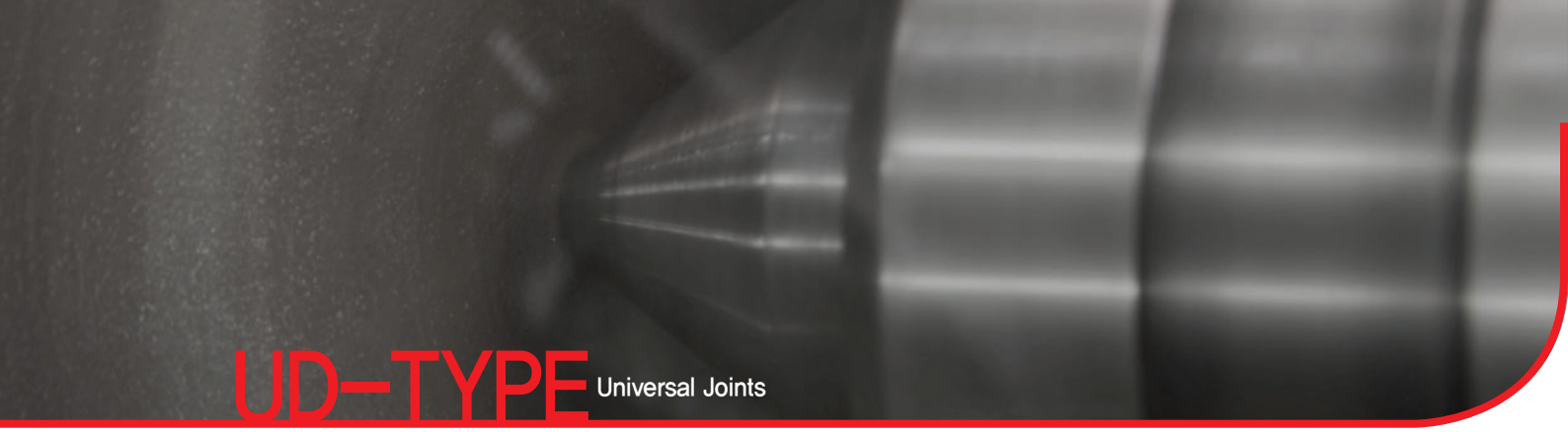

UD-TYPE Universal Joints

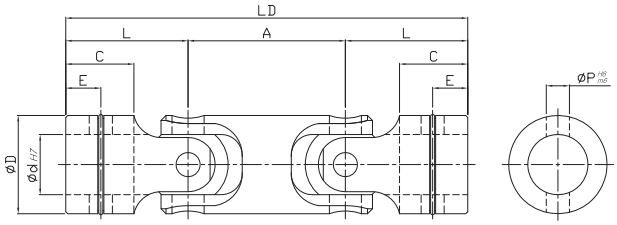

<PIN-TYPE>
UD**P

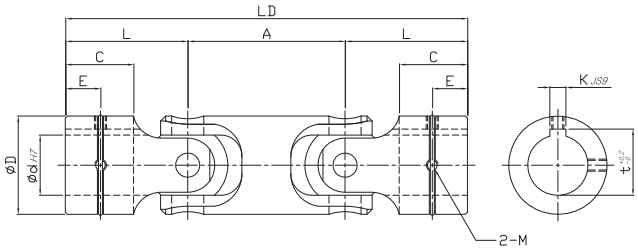

<KEY-TYPE>
UD**K

Product name		UD10	UD12	UD14	UD16	UD20	UD25	UD30	UD35	UD40	UD45	UD50
Allowable conditional variable		80,000	121,000	151,000	200,000	273,000	406,000	531,000	711,000	918,000	1,150,000	1,400,000
Max. Speed	min^{-1}	2,000	1,800	1,600	1,400	1,000	800	700	600	500	400	300
Tcs	Nm	61	100	140	230	390	750	1,100	1,800	2,700	3,500	4,300
Tdw	Nm	20	33	46	76	129	248	363	594	891	1,155	1,419
β (angle)	°	30	30	30	30	30	30	30	30	30	30	30
d	mm	10	12	14	16	20	25	30	35	40	45	50
D	mm	19	23	26	30	36	44	50	59	67	75	83
LD	mm	67.5	83	94.5	117.5	139	168	195	224	251	282	304
A	mm	25.5	31	35.5	43.5	52	63	73	83	94	106	113
L	mm	21	26	29.5	37	43.5	52.5	61	70	78.5	88	95.5
C	mm	12	15	17	22	25	30	35	40	45	50	55
E	mm	6	7.5	8.5	11	12.5	15	17.5	20	22.5	25	27.5
P	mm	4.5	5	5.8	6.5	8	10	11.5	13	14.5	16	17.5
K	mm	3	4	5	5	6	8 (7)	8 (7)	10 (10)	12 (10)	14 (12)	14 (12)
t	mm	11.4	13.8	16.3	18.3	22.8	28.3 (28)	33.3 (33)	38.3 (38.5)	43.3 (43.5)	48.8 (48.5)	53.8 (53.5)
M	mm	5	5	6	6	6	8	8	10	10	10	10
Ts	kg	1,300	2,300	2,600	3,900	5,200	8,100	10,000	14,000	18,000	22,000	28,000
Weight	g	95	180	250	410	690	1,240	1,775	3,180	4,150	6,225	7,750

* 19페이지를 참고하여 "Allowable conditional variable" 을 반드시 확인하여 선정할것.
* Tcs : Functional limit Torque
* Tdw : Fatigue Torque
* β : Maximum deflection angle per joint
* Ts : Static tensile load

| How to Order : UD 25 K7 or P x D44 x 168 ex) UD25K7xD44x168

TYPE d K(Key width) or P D LD

UP-TYPE

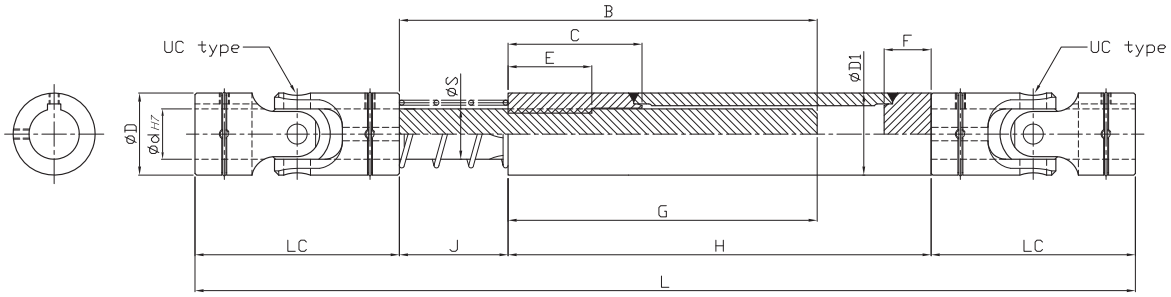

Product name		UP12	UP14	UP16	UP18	UP20	UP25	UP30	UP35	UP40	UP45	UP50
d	mm	12	14	16	18	20	25	30	35	40	45	50
D	mm	23	26	30	32	36	44	49	59	67	75	83
L	mm	224	238	348	362	454	501	535	572	632	652	702
La (stroke)	mm	30	30	100	100	100	100	100	100	100	100	100
B	mm	100	100	180	180	260	263	263	263	280	260	280
S (spline)	–	15–m1	15–m1	22–m1	22–m1	22–m1	30x25–6	30x25–6	38x32–6	42–m2	45x41–8	60x52–8
D1 (tube)	mm	23x3.4	24x3.9	31x3.25	33x4.25	36x5.75	44x6.5	49x7	59x8	67x9	75x6.35	83x8
E	mm	40	40	50	50	50	50	50	60	80	80	80
C	mm	67	67	80	80	80	80	80	90	120	120	120
LC	mm	52	59	74	81	87	105	122	140	157	176	191
G	mm	75	75	180	180	180	200	200	200	200	200	200(280)
F	mm	20	20	20	20	20	28	28	29	38	40	40
H	mm	95	95	200	200	200	228	228	229	238	240	320
J	mm	25	25	0	0	80	63	63	63	80	60	80(0)
Coil spring	–	–	–	–	–	ID23.5*Ø2 *17*200L	ID34*Ø3 *13*200L	ID34*Ø3 *13*200L	ID39*Ø3.5 *14*210L	ID55*Ø3.5 *14*210L	ID55*Ø3.5 *14*210L	ID65*Ø4 *13*210L

* L(Order Production) : Shortest possible compressed length
* La : Length compensation
* L + La : Maximum operating length
* LC : Refer to UC-type table

| How to Order : UP 25 K7 x D44 x 1000 (+100)

TYPE	d	K(Key width)		D		L	La

UB–TYPE Universal Joints

UB-type

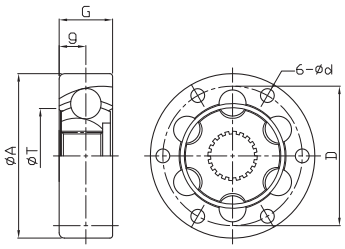

<UB75DP~150DP>

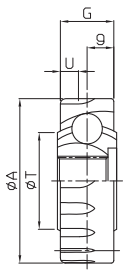

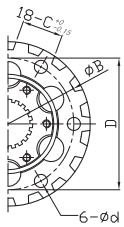

<UB175,225DP>

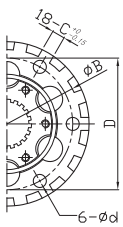

<UB200,250DP>

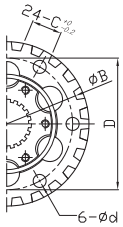

<UB300DP>

BEARING

UB **DP
Without Flange

UB **DFP
With Flange

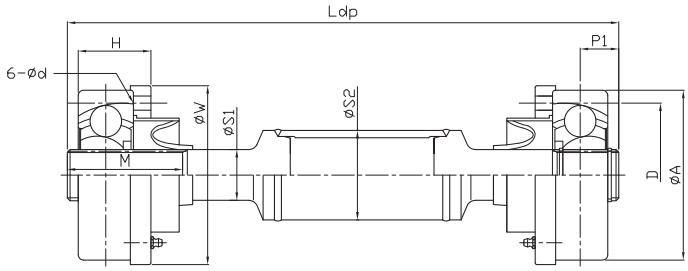

<Free side> <Fixed side>

UB **CLP
Without Flange

UB **CLFP
With Flange

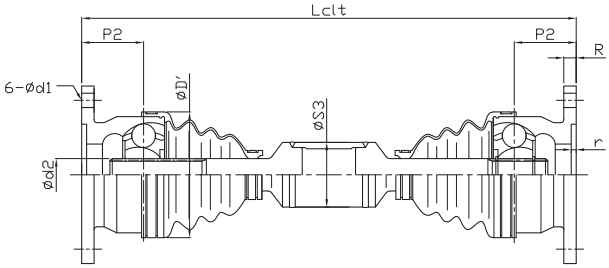

UB **CLT
Without Flange

UB **CLFT
With Flange

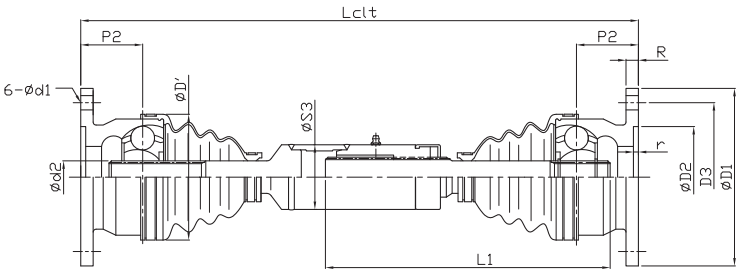

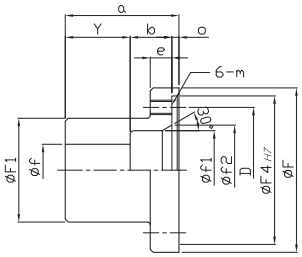

<UB75DFP~150DFP>

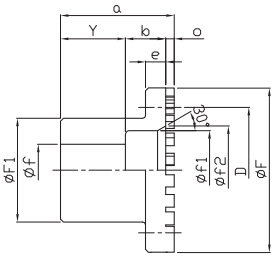

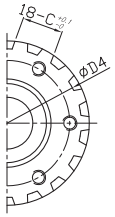

<UB175,225DFP>

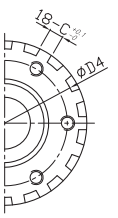

<UB200,250DFP>

<UB300DFP>

FLANGE

Product name		UB75	UB95	UB100	UB125	UB150	UB175	UB200	UB225	UB250	UB300
TD1	Nm	588	1,130	1420	2,750	4,710	6,720	11,200	14,700	20,700	29,100
TD2	Nm	392	637	882	1,470	2,890	4,020	5,880	7,550	10,700	15,800
Bearing	A	$80^{0}_{-0.046}$	$95^{0}_{-0.054}$	–	$125^{0}_{-0.063}$	$146^{0}_{-0.063}$	$165.1^{0}_{-0.1}$	$190^{0}_{-0.115}$	$212^{0}_{-0.115}$	$230^{0}_{-0.115}$	$266.7^{0}_{-0.13}$
	B	–	–	–	–	–	158.5	180	203	220.4	254
	C	–	–	–	–	–	42.4	16.25	54.7	19.3	50.6
	No. of teeth	–	–	–	–	–	18	18	18	18	24
	U	–	–	–	–	–	18	18	18	18	20
	D (pcd)	$66^{\pm0.15}$	$80^{\pm0.15}$	–	$106^{\pm0.15}$	$124^{\pm0.15}$	$139.7^{\pm0.2}$	$159^{\pm0.3}$	$180^{\pm0.3}$	$197^{\pm0.5}$	$225.4^{\pm0.5}$
	d	8.5	8.5	–	10.5	12.5	15	13.5	13.5	17.5	17.5
	G	24.4	31.8	–	40.6	48.2	50.8	60	65	75	84
	g	12.2	15.9	–	20.3	24.1	24.5	30	32.5	37.5	42
	T	45	60	–	76	92	108	126	143	156	175
DP / DFP series	W	85	100	–	130	151	170	196	218	238	273
	S1	22.33	26.36	–	36.33	45.6	51.6	59.5	65.4	74.25	83.4
	S2	48.6	48.6	–	60.5	76.3	89.1	101.6	101.6	139.8	139.8
	H	34.9	41.3	–	51.6	62	61.6	73.8	76.2	86.8	96.8
	P1	16	21	–	29	28	38	40	48	53	65
	M	60	70	–	80	135	135	135	160	160	165
	β °	14	14	–	16	16	16	16	16	18	18
	La (stroke)	±12	±16	–	±20	±24	±27	±29	±29	±30	±35
	Ldp (min.)	505	505	–	605	705	805	805	805	805	805
CLP / CLFP CLT / CLFT series	D1	118	136	154	179	192	215	250	265	–	–
	D′	81	108	112	148	165	172	199	222	–	–
	D2	$62^{+0.074}_{0}$	$70^{+0.074}_{0}$	$80^{+0.074}_{0}$	$102^{+0.087}_{0}$	$110^{+0.087}_{0}$	$125^{+0.1}_{0}$	$140^{+0.1}_{0}$	$155^{+0.1}_{0}$	–	–
	r	3	3	3	3.5	3.5	5	5	5	–	–
	R	8	10	10	10	12	15	16	18	–	–
	D3	97	110	125	150	165	185	215	228	–	–
	d1	10.5	12.5	14.5	14.5	14.5	17	19	21	–	–
	d2	22	27.5	29.75	36.75	46	52	60	66	–	–
	S3	48.6	48.6	60.5	60.5	89.1	101.6	101.6	139.8	–	–
	P2	40	46	47	55	76	83	95	105	–	–
	β °	25	25	25	25	25	25	25	25	–	–
	La (stroke)	±10	±10	±10	±10	±15	±15	±15	±15	–	–
	Lclp (min.)	545	550	550	655	785	885	905	905	–	–
	L1	270	310	320	340	450	520	520	590	–	–
	La (stroke)	+80,−6	+80,−6	+90,−8	+90,−8	+120,−15	+150,−15	+150,−15	+150,−15	–	–
	Lclt (min.)	455	515	580	610	830	910	950	1050	–	–
DP series Flange(DFP)	a	91	133	–	155	178	192	215	227	240	262
	b (fixed)	12	16	–	20	24	34	35	35	38	45
	b (free)	24	32	–	40	48	54	55	55	58	70
	Y (fixed)	74	112	–	130	148	150	170	180	190	205
	Y (free)	62	96		110	124	130	150	160	170	180
	o	5	5	–	5	5	8	10	12	12	12
	e	12	12	–	15	18	26	28	30	34	38
	F	85	100	–	130	152	175	200	220	245	275
	F1	55	65	–	90	105	120	140	160	180	205
	F2	80	95	–	125	146	159	181	204	222	256
	f2	50	63	–	80	96	110	130	150	160	180
	f1	45	55	–	75	85	95	110	130	138	155
	f (max.)	35	42	–	60	70	80	92	105	120	135
	m	M8	M8	–	M10	M12	M14	M12	M12	M16	M16
	Bolt length	55	60	–	75	90	100	110	120	130	150

* TD1 (Dynamic allowable torque) : When torque fluctuates during revolution in one direction
* TD2 (Dynamic allowable torque) : When start / stop and forward / reverserevolution are repeated frequently
* β : Maximum deflection angle per joint
* Ldp, Lclp, Lclt : Order Production

| How to Order : UB (TYPE) 125 (A) DFP (series) x 1000 (length) (±20) (La)

Selection method of Bearing Series

UL, UT, UK, UH, UE, UB-Type

Calculate the torque (Tn, Tsp) delivered to the Cardan shaft in comparison with the torque (Tdw, Tcs) indicated in the table of this catalogue and then select an item accordingly.
Cardan shaft에 전달되는 토크(Tn, Tsp)를 먼저 계산한 후 본 카달로그의 표에 기제된 토크(Tdw, Tcs)와 비교하여 알맞은 제품으로 선정한다.

Tn(N.m) = 716.2 x Hp / RPM x 9.8
974 x Kw / RPM x 9.8

Tn 〈 Tdw

Be sure that the value of Tn does not exceed that of Tdw. Otherwise, the lifespan of the Cardan shaft may be adversely affected.
Tn은 Tdw을 넘지 않도록 한다. 그렇지 않을 경우 Cardan shaft의 수명에 영향을 끼칠 수 있다.

* Hp : Power of the engine
* RPM : Maximum Rotative Velocity of the Cardan shaft(min^{-1})
* Tdw : Fatigue torque of Cardan shaft (Refer to the table)
* Kw : Power of the motor
* Tn : Nominal torque of the machine

Tsp(N.m) = Tn x K(Service factor)

Tsp 〈 Tcs

Be sure that the value of Tsp does not exceed that of Tcs. Otherwise, the Cardan shaft may be damaged.
Tsp은 Tcs을 넘지 않도록 한다. 그렇지 않을 경우 Cardan shaft는 파손 될 수 있다.

* Tsp : Maximum peak torque of the machine
* Tcs : Functional limit torque of Cardan shaft (Refer to the table)
* K : Service factor (The service factors shown in the following tables should be used as approximate values only.)

Light shock load: K = 1.1 – 1.5	Medium shock load: K = 1.5 – 2	Heavy shock load: K = 2 – 3
Driven machines Centrifugal pumps Generators (continuous load) Conveyors (continuous load) Small ventilators Machine tools Printing machines	Driven machines Centrifugal pumps Generators (non-continuous load) Conveyors (non-continuous load) Medium ventilators Wood handling machines Small paper and textile machines Pumps (multi-cylinder) Compressors (multi-cylinder) Road and bar mills Locomotive primary drives	Driven machines Large ventilators Marine transmissions Calender drives Transport roller tables Small pinch rolls Small tube mills Heavy paper and textile machines Compressors (single-cylinder) Pumps (single-cylinder)
Heavy shock load: K = 2 – 3	**Extra-heavy shock load: K = 3 – 5**	**Extreme shock load: K = 5 – 10**
Driven machines Mixers Bucket wheel reclaimers Bending machines Presses Rotary drilling rigs Locomotive secondary drives Continuous casters Crane drives	Driven machines Continuous working roller tables Medium section mills Continuous slabbing and blooming mills Continuous heavy tube mills Reversing working roller tables Vibration conveyors Scale breakers Straightening machines Cold rolling mills Reeling drives Blooming stands	Driven machines Feed roller drives Wrapper roll drives Plate-shears Reversing slabbing and blooming mills

Selection method of UC, UD Series

In the use of an universal joint, many factors such as rotating speed,angle, torque and lubrication must be considered. The following selection method shows that, firstly, it is checked the total multiplied value of rotating speed, angle and torque is not exceeding the allowable conditional variable shown in each selection table. Secondly, it is checked that each value of the above three factors does not exceed the allowable value each.

유니버설 조인트 사용에 있어서는 회전속도, 각도, 토크, 윤활 같은 여러 요인들을 고려하여야 합니다. 다음의 선정방법은 첫째로 회전속도, 각도 및 토크의 총 곱한 값이 각 선정 표의 허용 조건변수를 초과하지 않아야 한다는 것을 보여주고 두 번째로는 위에 언급한 세 가지 요인의 각 값이 각각의 허용 값을 초과하지 않아야 됨을 보여줍니다.

1.Conditional variable 조건변수

(Calculation formula) (계산 공식)

Calculation conditional variable = Rotating speed (min^{-1}) x angle (°) x torque (N.m)

조건변수 계산 = 회전속도 x 각도 x 토크

Calculation conditional variable 〈 Allowable conditional variable

조건변수 계산 값 〈 표의 허용 조건변수

2.Rotating speed (min^{-1}) 회전속도 (min^{-1})

Rotating speed x angle coefficient 〈 Allowable rotating speed

회전속도 각도 x 상수 값 〈 표의 허용 회전속도

Angle coefficient table 각도 상수 표

Angle 각도	5° and Under 각도 5° 이하	10°	15°	20°	25°	30°
Angle coefficient 각도상수	1.00	1.05	1.18	1.43	1.82	2.50

3.Angle(°) 각도 (°)

Angle 〈 Allowable operating angle

각도 〈 표의 허용 작동각도

4.Torque (N.m) 토크 (N.m)

Torque 〈 Allowable torque

토크 〈 표의 허용토크

Selection example 선정 예시

When UC series is to be used under a rotating speed of 800min^{-1}, an operating angle 15°,
and a transmission torque of 10 N.m, the calculation conditional variable 120000 is obtained from the following formula.

UC 시리즈가 회전속도 800min-1, 작동각도 15° , 트랜스미션 토크 10N.m의 조건에서 사용될 경우 다음의 공식을 통하여 조건변수 계산 값 120000을 구할 수 있습니다.

Rotating speed x angle x torque = Conditional variable

회전속도 x 각도 x 토크 = 조건변수

800 x 15 x 10 = 120000

Secondly, check the allowable rotating speed of UC-12 according to the following formula.

둘째, 다음의 공식에 따라 UC-12의 허용 회전속도를 확인하십시오.

Rotating speed x angle coefficient 〈 Allowable rotating speed

회전속도 x 각도 상수 값 〈 표의 허용 회전속도

Do the above calculations and compare the allowable conditions to each of the items for UC-12.

위에 설명한 계산을 하시고 UC-12의 각 항목별 허용조건과 비교해 보십시오.

1. Conditional variable ———— 120000 〈 Allowable conditional variable ———— 120000
   조건변수 ———— 120000 〈 허용 조건변수 ———— 120000
2. Rotating speed ———— 800min^{-1} x 1.18 〈 Allowable rotating speed ———— 1800min^{-1}
   회전속도 ———— 800min^{-1} x 1.18 〈 허용 회전속도 ———— 1800min^{-1}
3. Angle ———— 15° 〈 Allowable operating angle ———— 30°
   각도 ———— 15° 〈 허용 작동각도 ———— 30°
4. Torque ———— 10N.m 〈 Allowable torque ———— 46N.m
   토크 ———— 10N.m 〈 허용 토크 ———— 46N.m

The universal joint meeting the requirements of the above service conditions, with good lubricating conditions, is the **UC-12.**

위에 언급한 작동 조건의 요구사항에 부합하며 양호한 윤활조건을 갖춘 유니버설 조인트는 UC-12입니다.

UJ TECH
www.universaljoint.co.kr

513 Cheongtong-ro, Cheongtong-myeon,
Yeongcheon-si, Gyeongsangbuk-do, Korea경상북
도 영천시 청통면 청통로 513
www.universaljoint.co.kr

2014.11.20